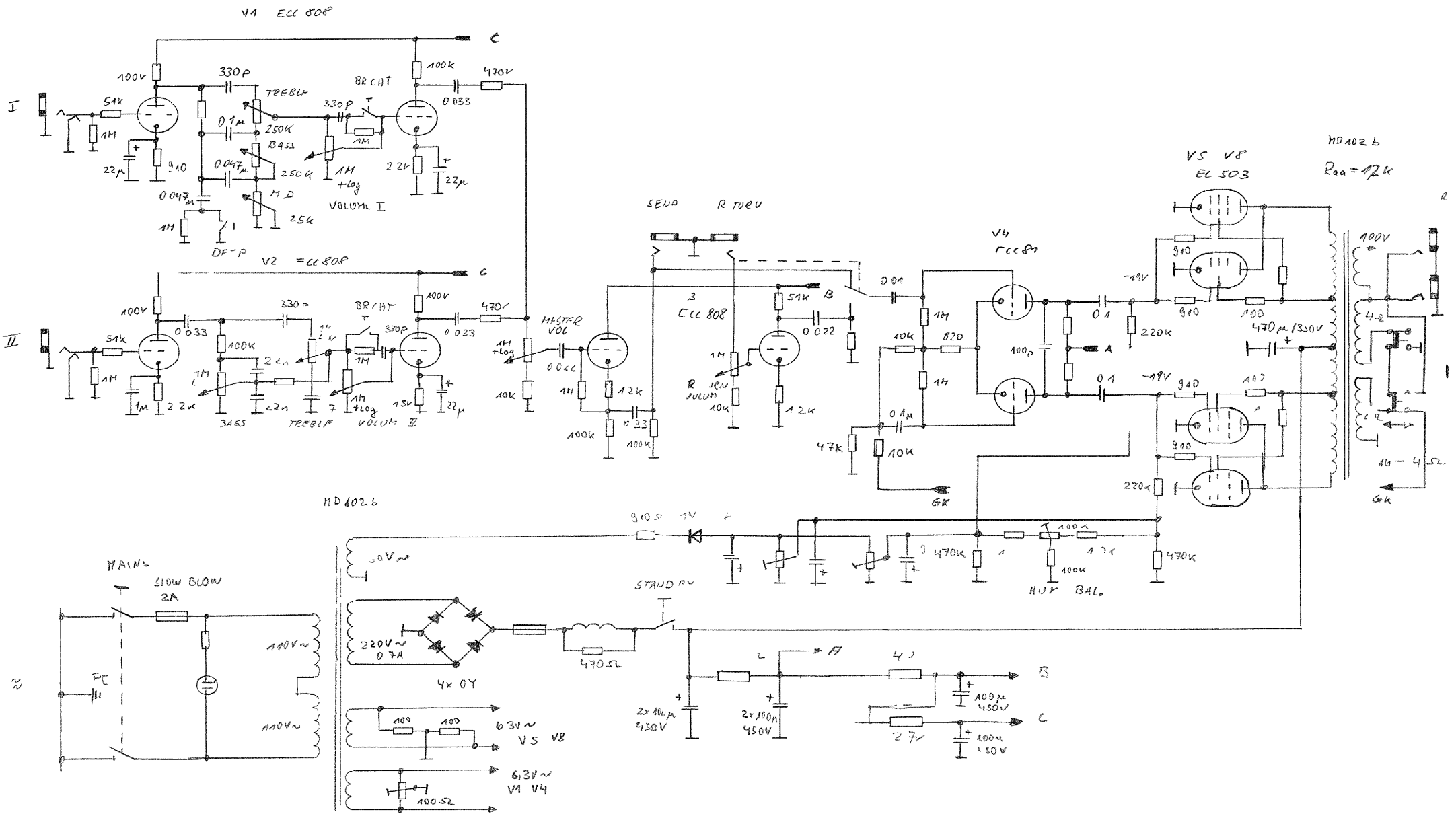

80W BASS-AMP BGV 67
REDESIGNED UTA SION 4/88