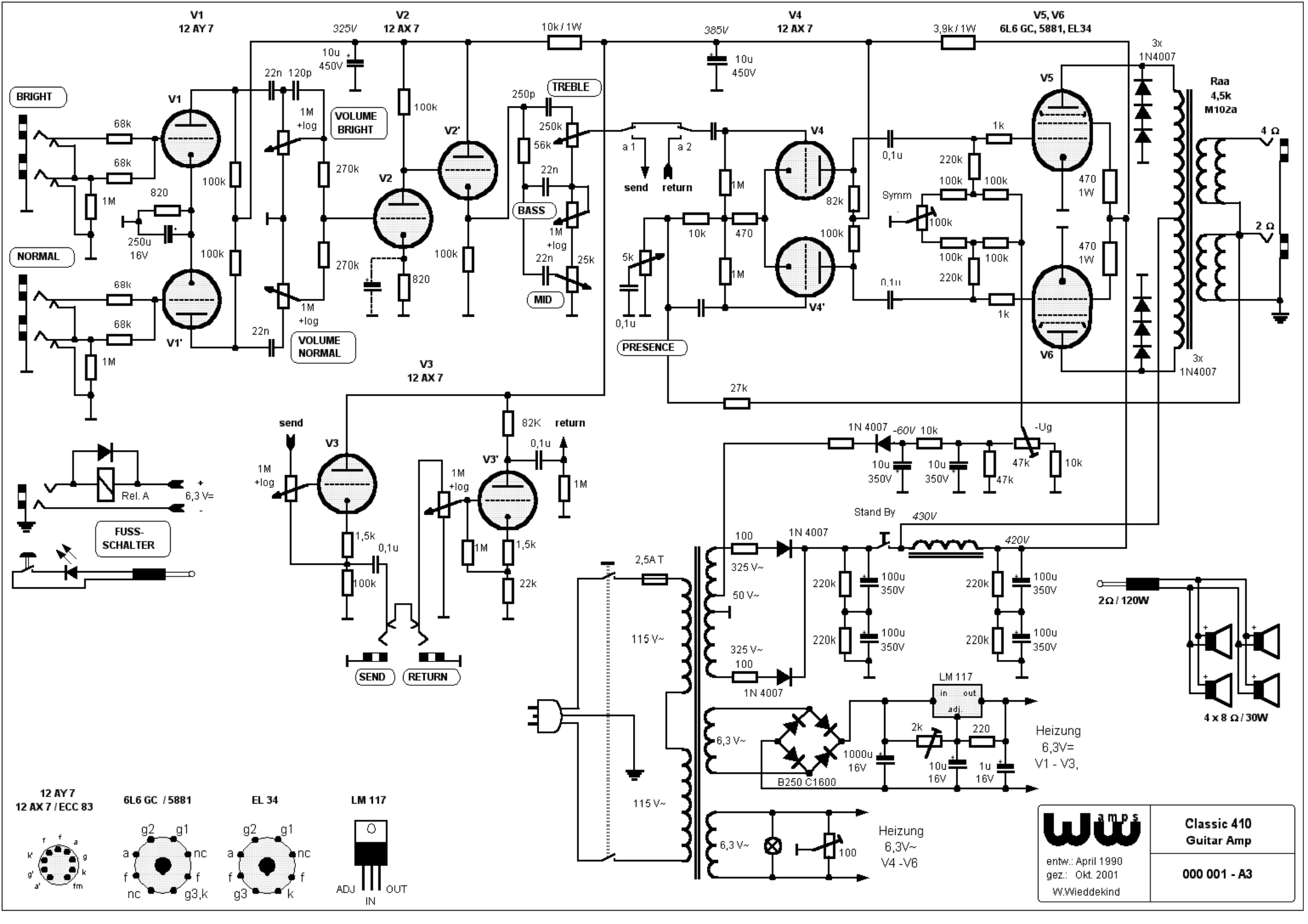
V1
12 AY 7
V2
12 AX 7
V4
12 AX 7
V5, V6
6L6 GC, 5881, EL34
V3
12 AX 7
BRIGHT
NORMAL
VOLUME BRIGHT
VOLUME NORMAL
TREBLE
BASS
MID
PRESENCE
send
return
Symm
Raa
4,5k
M102a
4 Ω
2 Ω
3x 1N4007
FUSS-SCHALTER
Rel. A
6,3 V=
SEND
RETURN
Stand By
-Ug
2,5A T
115 V~
325 V~
50 V~
1N 4007
LM 117
in
out
adj
B250 C1600
Heizung 6,3V= V1 - V3,
Heizung 6,3V~ V4 -V6
2Ω / 120W
4 x 8 Ω / 30W
12 AY 7
12 AX 7 / ECC 83
6L6 GC / 5881
EL 34
LM 117
ADJ
IN
OUT
Classic 410
Guitar Amp
entw.: April 1990
gez.: Okt. 2001
W.Wieddekind
000 001 - A3