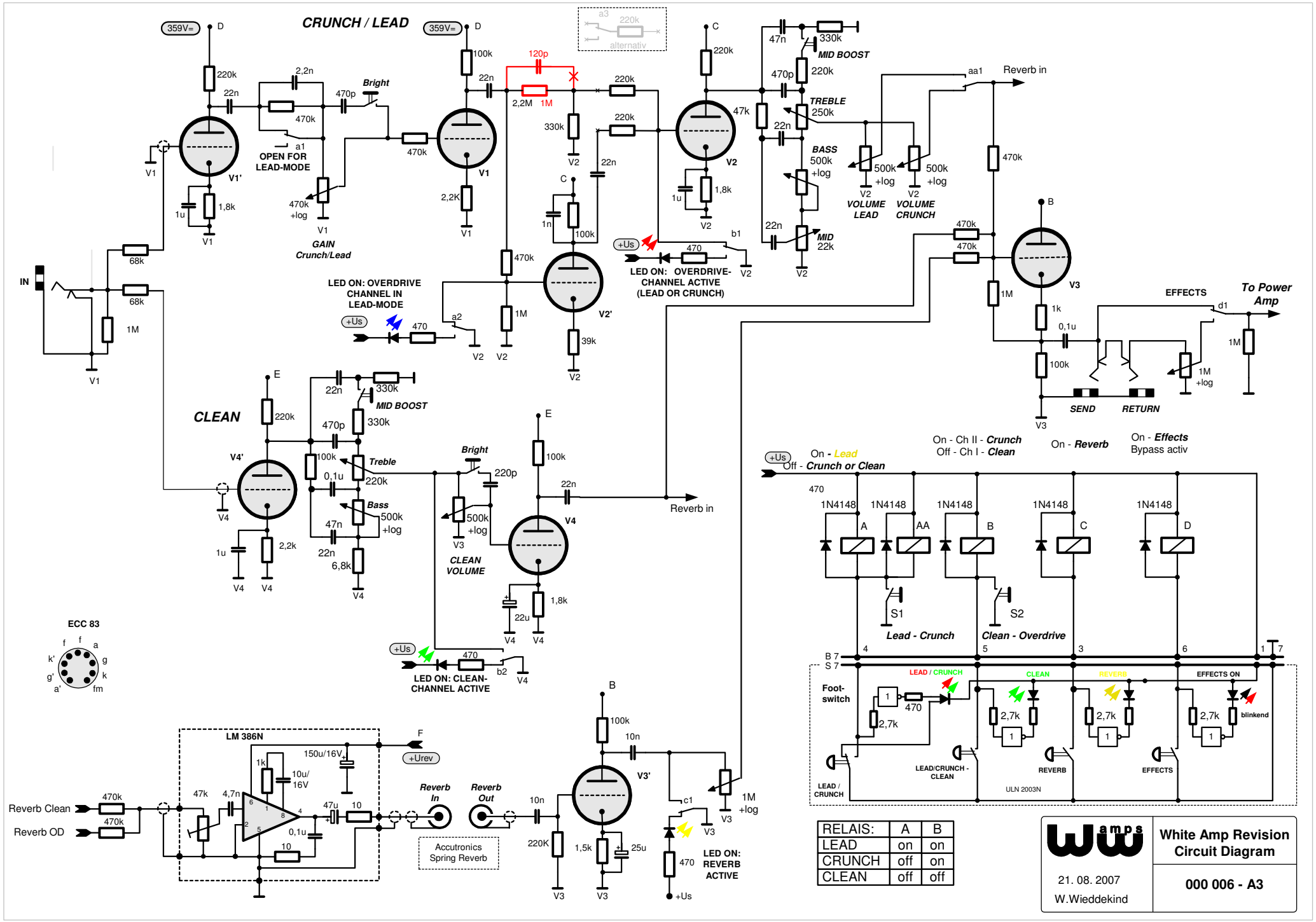

RELAIS:	A	B
LEAD	on	on
CRUNCH	off	on
CLEAN	off	off

White Amp Revision Circuit Diagram

21. 08. 2007
W.Wieddekind

000 006 - A3